OLD FILE NAME: 085066/A1

PREPARED BY:	SANDIA NATIONAL LABORATORIES FACILITIES ENGINEERING	DETAIL NO.: AE5006
CHECKED BY:		SCALE: NONE
DATE: 6-15-01 / REV:	TYPE "C" SAFETY RING BOLT INSTALLATION	ARCHITECTURAL STDROF.DGN

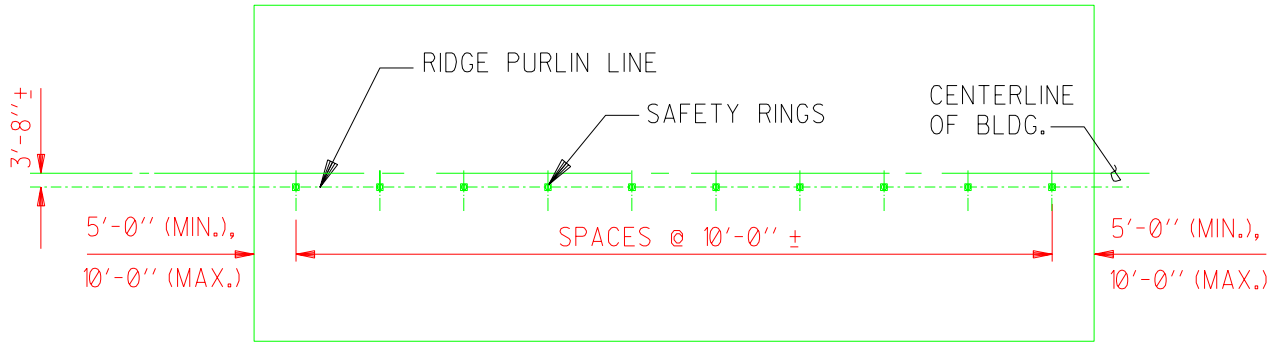

ROOF PLAN

TYPICAL QUONSET BUILDING

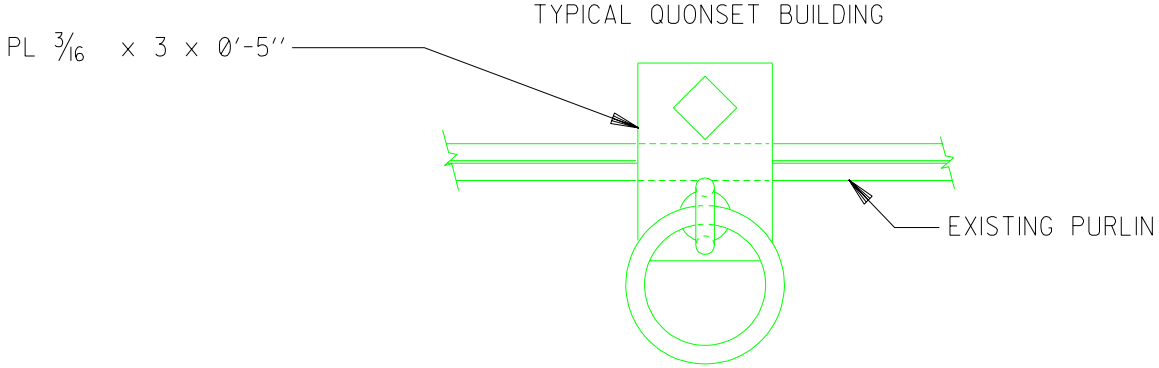

PLAN

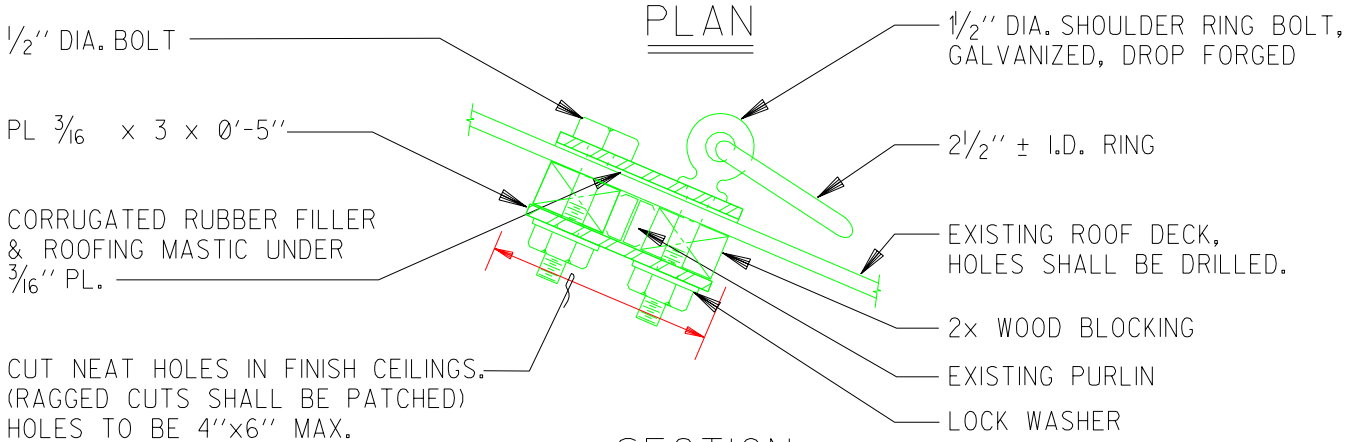

SECTION

SAFETY RING DETAIL - TYPE "C"

"Property of Sandia National Laboratories Facilities Management and Operation Center (FMOC). No duplication or alteration allowed without the expressed permission and authorization of FMOC."