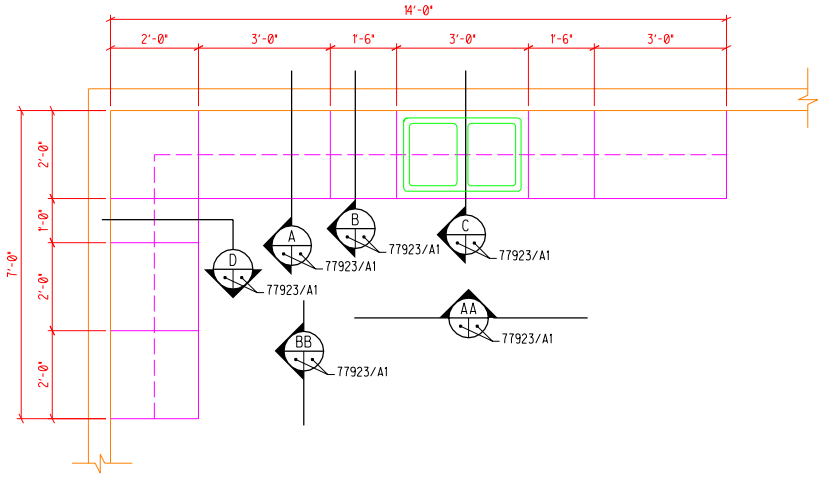

PLAN

SCALE: 1/2" = 1'-0"

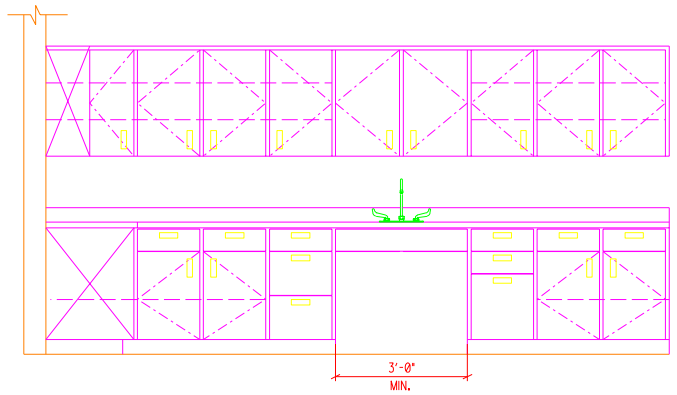

AA ELEVATION

77923/A1

SCALE: 1/2" = 1'-0"

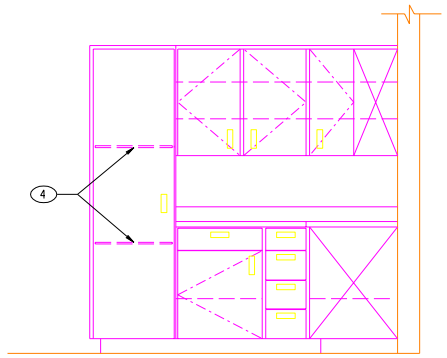

BB ELEVATION

77923/A1

SCALE: 1/2" = 1'-0"

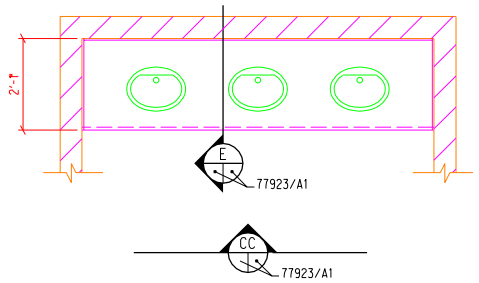

BATHROOM VANITY PLAN

SCALE: 1/2"=1'-0"

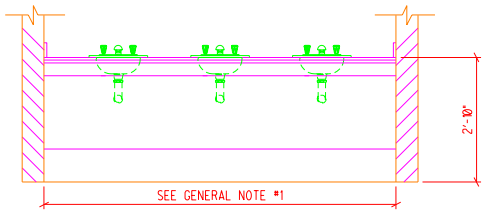

CC ELEVATION

77923/A1

SCALE: 1/2" = 1'-0"

GENERAL NOTES

1. VANITY CLEAR SPANS OVER 6'-0" SHALL HAVE A SUPPORT MEMBER DESIGNED TO CARRY REQUIRED LOAD .

KEYED NOTES

1. PLASTIC LAMINATE, TOP AND SPLASH.
2. 2 - 3/4" PARTICLEBOARD, TOP WITH PLASTIC LAMINATED FINISH.
3. 3/4" X 4" BACKING.
4. 1/2" MELAMINE ADJUSTABLE SHELVES.
5. DESK DRAWER/FILE DRAWER WITH PULLS.
6. 3" VALANCE.
7. FLUSH DOOR.
8. ADJUSTIBLE HOLE FOR SHELVING.
9. 2X6 WOOD BLOCKING. TYPICAL AT ALL CABINETS AND VANITIES.
10. WALL SUBSTRATE.
11. 6" VALANCE.

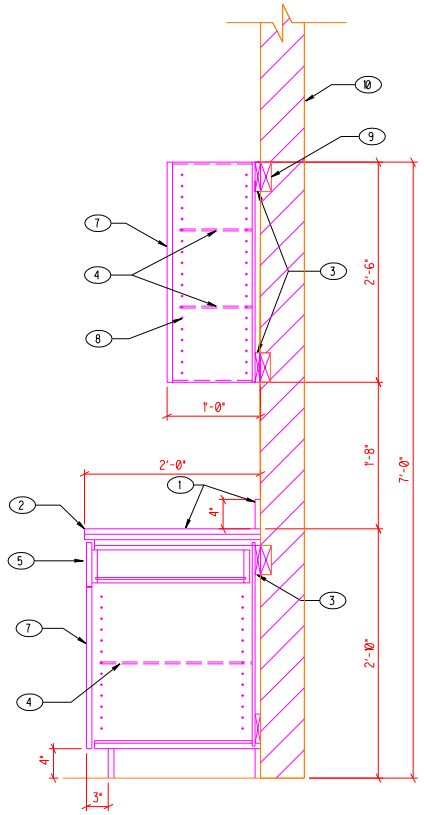

A SECTION

77923/A1

SCALE: 1"=1'-0"

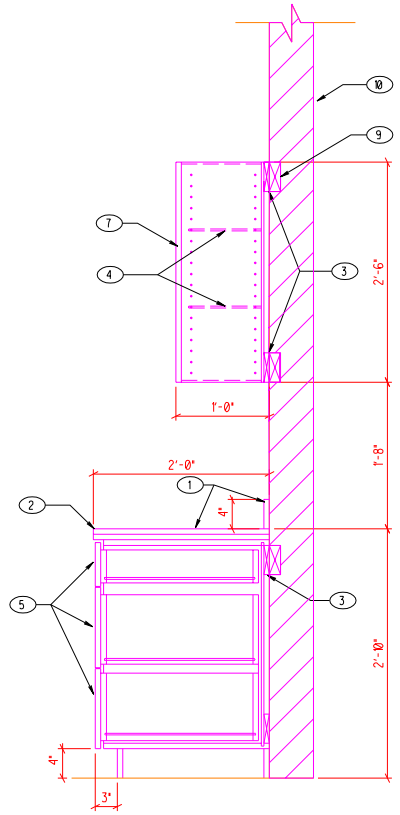

B SECTION

77923/A1

SCALE: 1"=1'-0"

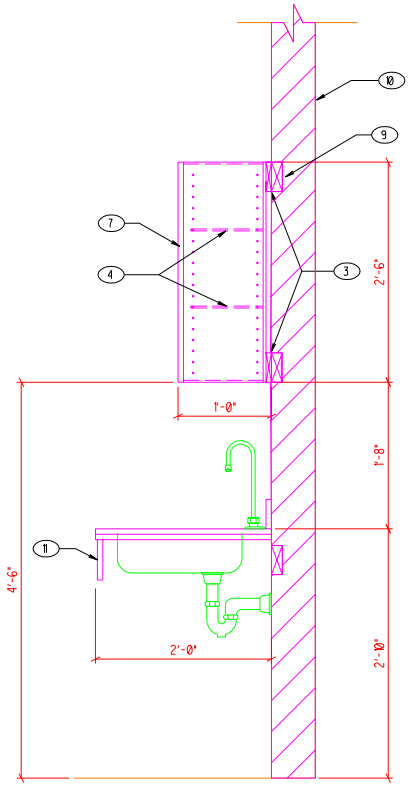

C SECTION

77923/A1

SCALE: 1"=1'-0"

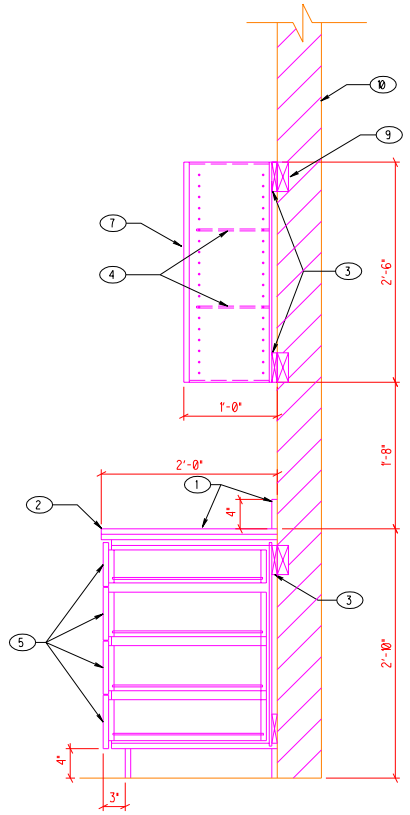

D SECTION

77923/A1

SCALE: 1"=1'-0"

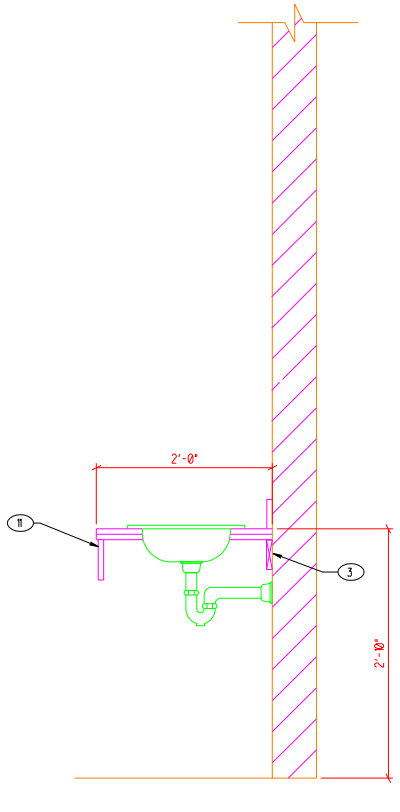

E SECTION

77923/A1

SCALE: 1"=1'-0"

P.O. PROJECT NO.	REV	DATE	DESCRIPTION	DWN	CKD	APP
		6-15-01	UDS MODS	EG FL		

U.S. DEPARTMENT OF ENERGY

KIRTLAND AREA OFFICE — ALBUQUERQUE, NEW MEXICO

SANDIA NATIONAL LABORATORIES

CASEWORK SECTIONS

P.O.	
PROJECT NO.	EP4665
DRAWN BY	MAJ
CHECKED BY	WC
SNL ENGR	
DATE	1-99

ARCHITECTURAL — STANDARDS

SIZE D+ — DRAWING NO AE5002STD — SEQ.

OLD FILE NAME: 077923/A1

MICROSTATION FILE

FILE NAME: AE5002STD.dgn

REFERENCE FILES:

"Property of Sandia National Laboratories Facilities Management and Operation Center (FMOC). No duplication or alteration allowed without the expressed permission and authorization of FMOC."