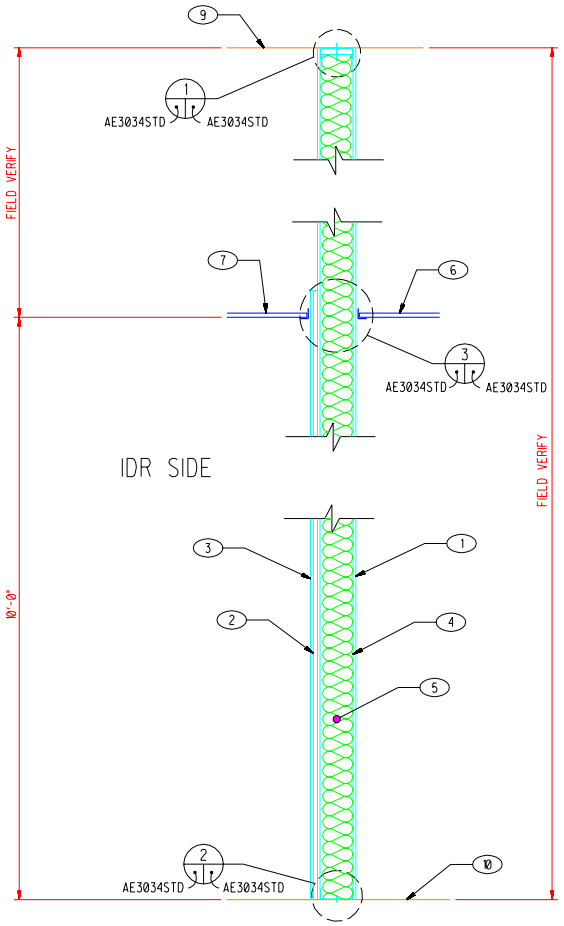


A SECTION - NEW IDR WALL W/ELECTRICAL PANEL
SCALE: 3/4" = 1' - 0"
FLRPLAN AE3034STD

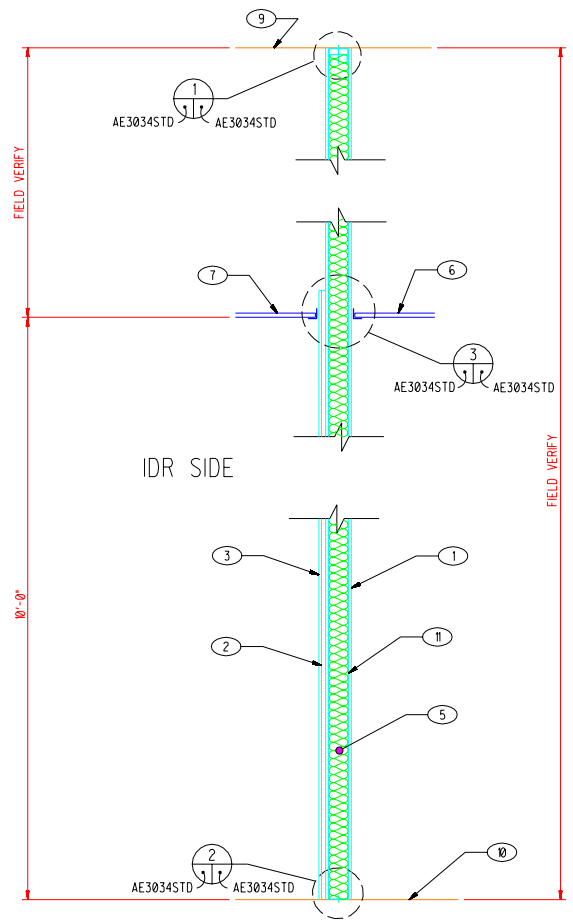


B SECTION - NEW IDR WALL
SCALE: 3/4" = 1' - 0"
FLRPLAN AE3034STD

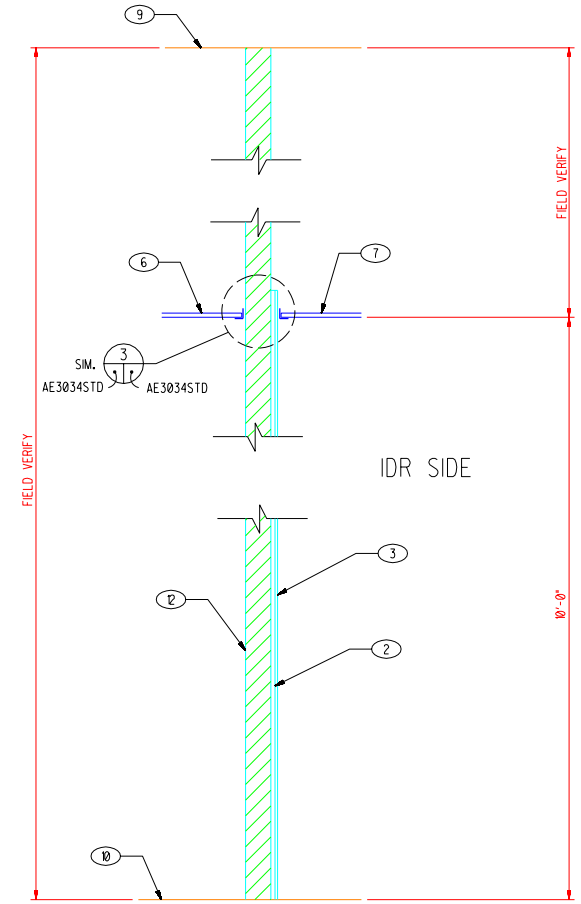


C SECTION - EXISTING WALL
SCALE: 3/4" = 1' - 0"
FLRPLAN AE3034STD

## KEYED NOTES

1. ONE LAYER 5/8" TYPE "X" GYPSUM BOARD APPLIED TO EACH SIDE OF METAL FRAMING WITH 1" TYPE "S" DRYWALL SCREWS 8" O.C. TO VERTICAL EDGES AND 12" O.C. TO TOP AND BOTTOM RUNNERS AND INTERMEDIATE STUDS. STAGGER ALL VERTICAL AND HORIZONTAL JOINTS 16" O.C. EACH SIDE AND OPPOSITE SIDES. TAPE, TEXTURE AND PAINT IDR EXTERIOR TO MATCH EXISTING WALLS IN PROXIMITY.
2. 3/4", APA GRADE C, FIRE RATED PLYWOOD APPLIED TO BASE LAYER OF 5/8" GYPSUM BOARD WITH 1 5/8" TRIM HEAD SCREWS AT 16" O.C.E.W.
3. ONE LAYER 1/2" TYPE "X" GYPSUM BOARD APPLIED TO FIRE RATED PLYWOOD AND BASE LAYER OF GYPSUM BOARD WITH 2 1/4" TRIM HEAD SCREWS AT 16" O.C.E.W.. TAPE, TEXTURE AND PAINT WITH WELLBORN "BIRCH WHITE", OR PRODUCT OF EQUIVALENT COLOR AND LIGHT-REFLECTIVITY. REFER TO DIVISION 9, STANDARD SPECIFICATION SECTION "PAINTING".
4. 6" x 18 GA. METAL STUD FRAMING AT 16" O.C.
5. GLASS FIBER INSULATION FRICTION FIT IN STUD CAVITY.
6. EXISTING SUSPENDED CEILING SYSTEM. REPAIR AS REQ'D DUE TO NEW CONSTRUCTION.
7. NEW SUSPENDED CEILING SYSTEM TO MATCH EXISTING CONDITIONS.
8. NEW FLOORING TO BE VINYL COMPOSITION TILE, ARMSTRONG "CLASSIC WHITE" #51911, OR PRODUCT OF SIMILAR COLOR AND LIGHT-REFLECTIVITY. REFER TO DIVISION 9, STANDARD SPECIFICATION SECTION "RESILIENT TILE FLOORING".
9. EXISTING STRUCTURE ABOVE.
10. EXISTING FLOORING.
11. 3 5/8" x 18 GA. METAL STUD FRAMING AT 16" O.C.
12. EXISTING 1HR FIRE RATED WALL.
13. SECURE METAL TOP TRACK TO EXISTING STRUCTURE ABOVE WITH SCREWS AT 18" O.C.
14. METAL SLIP TRACK.
15. GYPSUM WALLBOARD CASING.
16. SEAL WITH 1HR FIRESTOP MATERIAL.
17. 4" VINYL COVE BASE. USE RED AND BLACK VINYL BASE FOR "RED" AND "BLACK" COMMUNICATIONS SIDE OF THE IDR, RESPECTIVELY. REFER TO DIVISION 9, STANDARD SPECIFICATIONS SECTION "RESILIENT TILE FLOORING".
18. METAL FLOOR RUNNER SECURED TO EXISTING CONCRETE FLOOR WITH POWDER ACTUATED FASTENERS AT 16" O.C.
19. 1 1/4" GYPSUM WALLBOARD CORNER BEAD.
20. 4" VINYL COVE BASE TO MATCH EXISTING BASE IN PROXIMITY.
21. NEW CEILING EDGE TRIM.
22. SECURE NEW IDR WALL TO EXISTING WALL WITH 1 5/8" DRYWALL SCREWS AT 12" O.C.

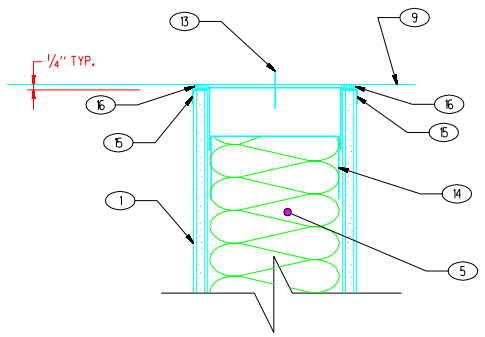


1 DETAIL- IDR WALL/STRUCTURE CONNECTION
SCALE: NTS
AE3034STD AE3034STD

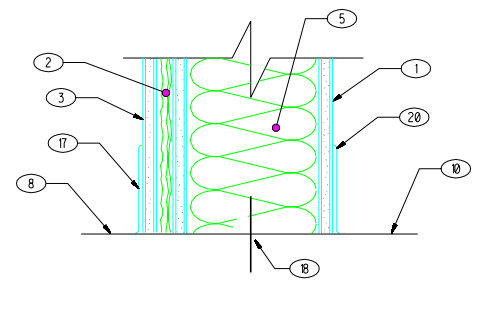


2 DETAIL - IDR WALL/FLOOR CONNECTION
SCALE: NTS
AE3034STD AE3034STD

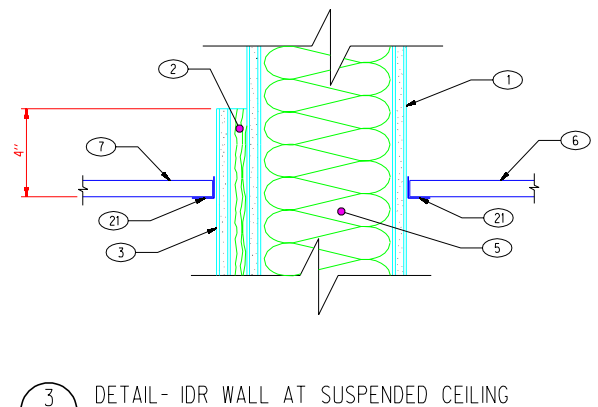


3 DETAIL- IDR WALL AT SUSPENDED CEILING
SCALE: NTS
AE3034STD AE3034STD

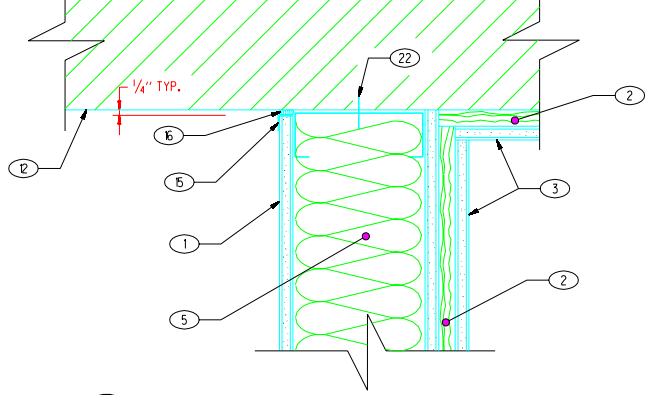


4 DETAIL- IDR WALL CONNECTION AT EXISTING WALL
SCALE: NTS
FLRPLAN AE3034STD

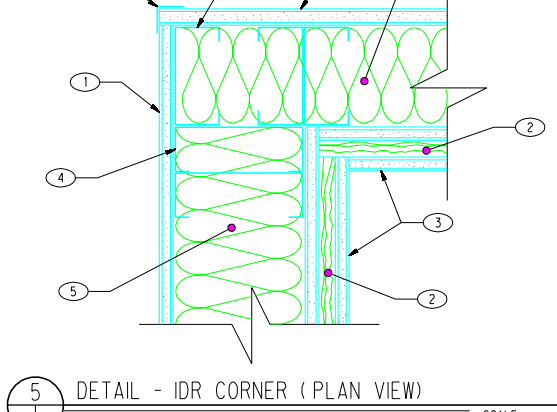


5 DETAIL - IDR CORNER (PLAN VIEW)
SCALE: NTS
FLRPLAN AE3034STD

| REV | DATE | DESCRIPTION | DWN | CKD | APP |
|---|---|---|---|---|---|
| | | | | | |
| | | | | | |
| B | 6-15-01 | UDS MODS | ELG FLO | | |
| A | 3/98 | COMMUNICATIONS STD. MODS. | MAJ | NE | |

P.O. EP4665
PROJECT NO.

U.S. DEPARTMENT OF ENERGY
KIRTLAND AREA OFFICE — ALBUQUERQUE, NEW MEXICO
SANDIA NATIONAL LABORATORIES

COMMUNICATIONS IDR WALL SECTIONS

| | |
|---|---|
| P.O. | |
| PROJECT NO. | ES3419 |
| DRAWN BY | MPW/H&N |
| CHECKED BY | EC/H&N |
| SNL ENGR | |
| DATE | 12-01-95 |

ARCHITECTURAL — STANDARD
SIZE D+ — DRAWING NO AE3034STD — SEQ.

OLD FILE NAME: 104033/A1
MICROSTATION FILE
FILE NAME: AE3034STD.dgn
REFERENCE FILES: BORDER3.DGN

"Property of Sandia National Laboratories Facilities Management and Operation Center (FMOC). No duplication or alteration allowed without the expressed permission and authorization of FMOC."