OLD FILE NAME: 099518/A1

PREPARED BY:	SANDIA NATIONAL LABORATORIES SANDIA NATIONAL LABORATORIES FACILITIES ENGINEERING	DETAIL NO.: AE3031
CHECKED BY:		SCALE: NONE
DATE: 6-15-01 / REV:	PIPE SEAL AT ROOF PENETRATIONS - FOR BUILT-UP ROOFS	ARCHITECTURAL STANDARD

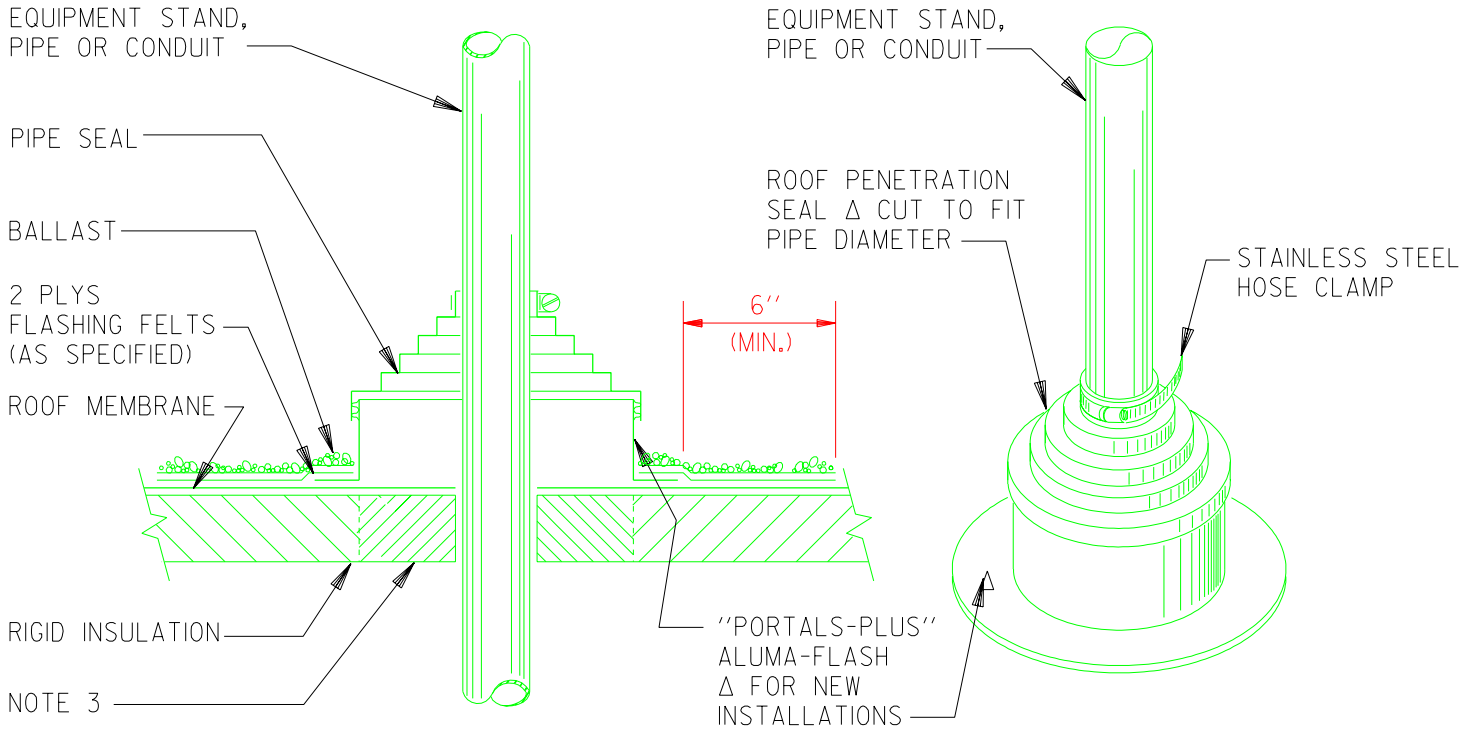

SECTION

ISOMETRIC

NOTES:

1. ROOF PENETRATION SEAL SHALL BE NEOPRENE RUBBER CAP W/ STAINLESS STEEL CLAMPS. (SEE SCHEDULE FOR SEAL TYPES). ALL SPECIFIED SEAL TYPES TO FIT ''PORTALS-PLUS'' ALUMA-FLASH.

2. TO INSTALL ALUMA-FLASH W/ CAP, SCRAPE BACK ALL LOOSE GRAVEL (IF EXISTING) IN THE AREA TO BE FLASHED (2'-0'' MIN. FROM PENETRATION). REMOVE DIRT AND OTHER FOREIGN MATTER FROM THE SURFACE AND SET BASE OF ALUMA-FLASH IN ''POLYROOF'', THEN FLASH W/ ALTERNATE COURSES OF ''POLYROOF'' AND ''BUR-MESH'' (BOTH PRODUCTS BY ''TREMCO'') AND RECOVER FLASHING W/ BALLAST.

3. IF RIGID INSULATION IS CUT OUT FOR SETTING OF EQUIPMENT STAND BASE PLATE, AND VOID IS LARGER THAN BASE OF ALUMA-FLASH, FILL SPACE W/ RIGID INSULATION OR WOOD BLOCKING.

TYPE	DESCRIPTION	NO. REQ'D
C-126	(1) PIPE - 2'' to 6''	
C-412	(4) PIPES - 1'' to 2''	
C-481	(4) PIPES - 3/8'' to 1''	
C-212	(2) PIPES - 3/8'' to 1'' (2) PIPES - 1'' to 2''	

"Property of Sandia National Laboratories Facilities Management and Operation Center (FMOC). No duplication or alteration allowed without the expressed permission and authorization of FMOC."