OLD FILE NAME: 094161/A3

PREPARED BY: YMA	SANDIA NATIONAL LABORATORIES FACILITIES ENGINEERING	DETAIL NO.: AE3013
CHECKED BY: WJC		SCALE: 3" = 1'-0"
DATE: 6-15-01 / REV:	SITE BUILT CURB & CURB EXTENSION	ARCHITECTURAL STDROF.DGN

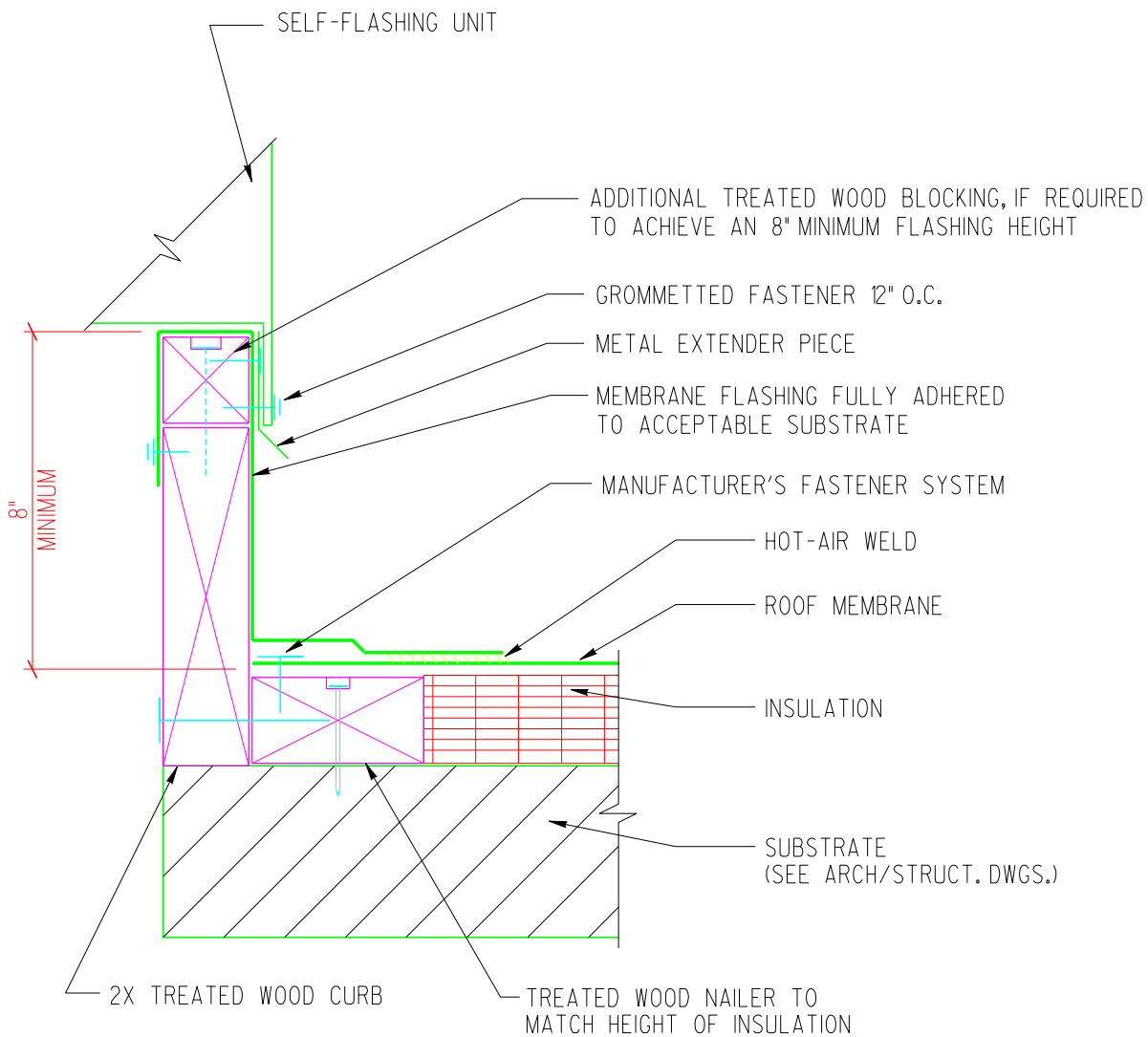

NOTE:

METAL EXTENDER PIECE IS REQUIRED IF EXISTING COUNTERFLASHING IS CONTAMINATED AND OR COUNTERFLASHING FASCIA IS LESS THAN 4 INCHES WIDE. FASTEN AT 12 INCHES O.C. WITH GROMMETTED FASTENER.

"Property of Sandia National Laboratories Facilities Management and Operation Center (FMOC). No duplication or alteration allowed without the expressed permission and authorization of FMOC."