OLD FILE NAME: 094159/A2

PREPARED BY: MAJ	SANDIA NATIONAL LABORATORIES FACILITIES ENGINEERING	DETAIL NO.: AE3007
CHECKED BY: WJC		SCALE: 3" = 1'-0"
DATE: 6-15-01 / REV:	PIPE PENETRATION - EXTENDED	ARCHITECTURAL STDROF.DGN

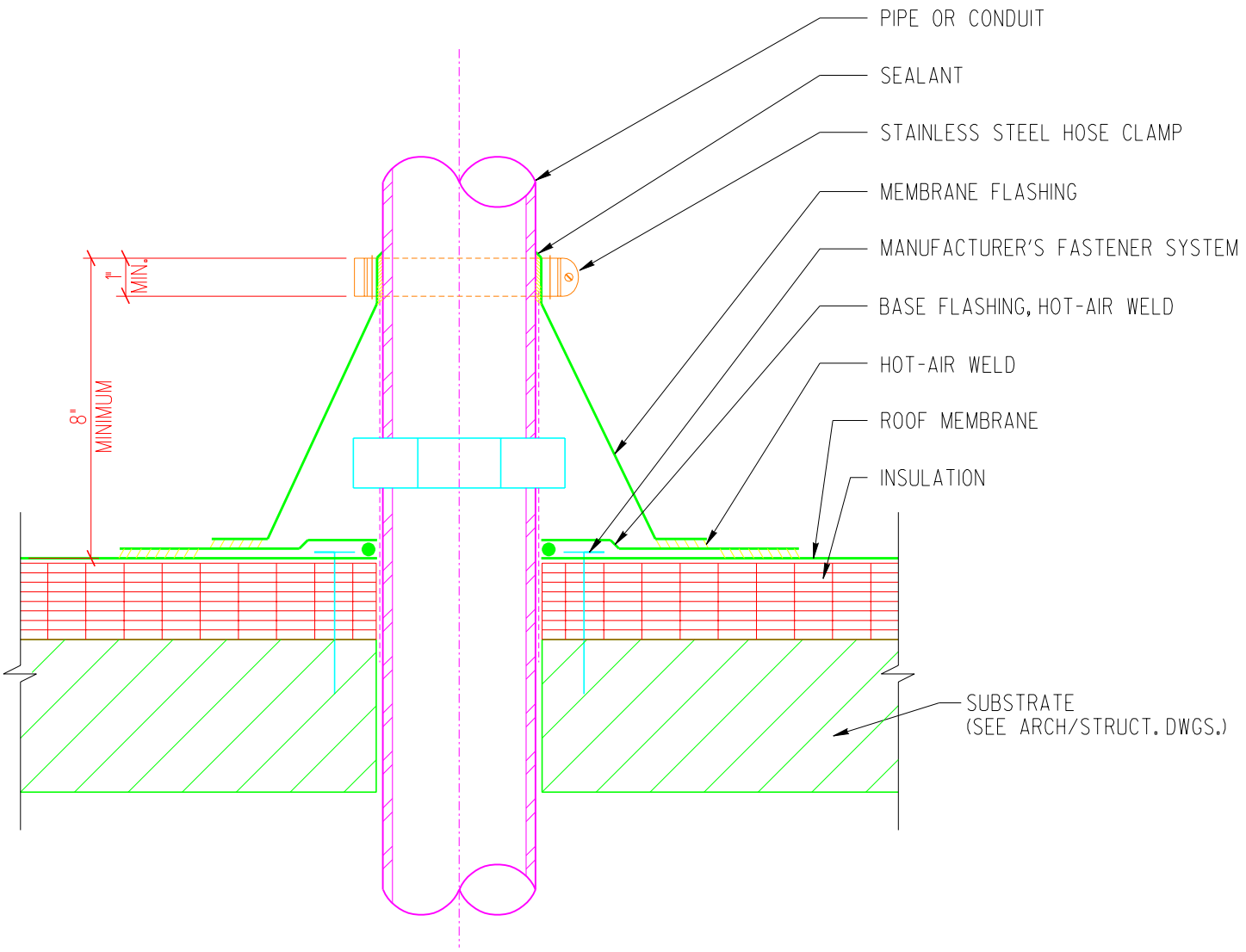

"Property of Sandia National Laboratories Facilities Management and Operation Center (FMOC).
No duplication or alteration allowed without the expressed permission and authorization of FMOC."