OLD FILE NAME: 086880/A1

PREPARED BY:	SANDIA NATIONAL LABORATORIES FACILITIES ENGINEERING	DETAIL NO.: AE3001
CHECKED BY:		SCALE: NONE
DATE: 6-15-01 / REV:	PENETRATIONS OF NEOPRENE HYPALON ROOFING	ARCHITECTURAL STDROF.DGN

NOTE:

NOT APPLICABLE TO HOT STACKS

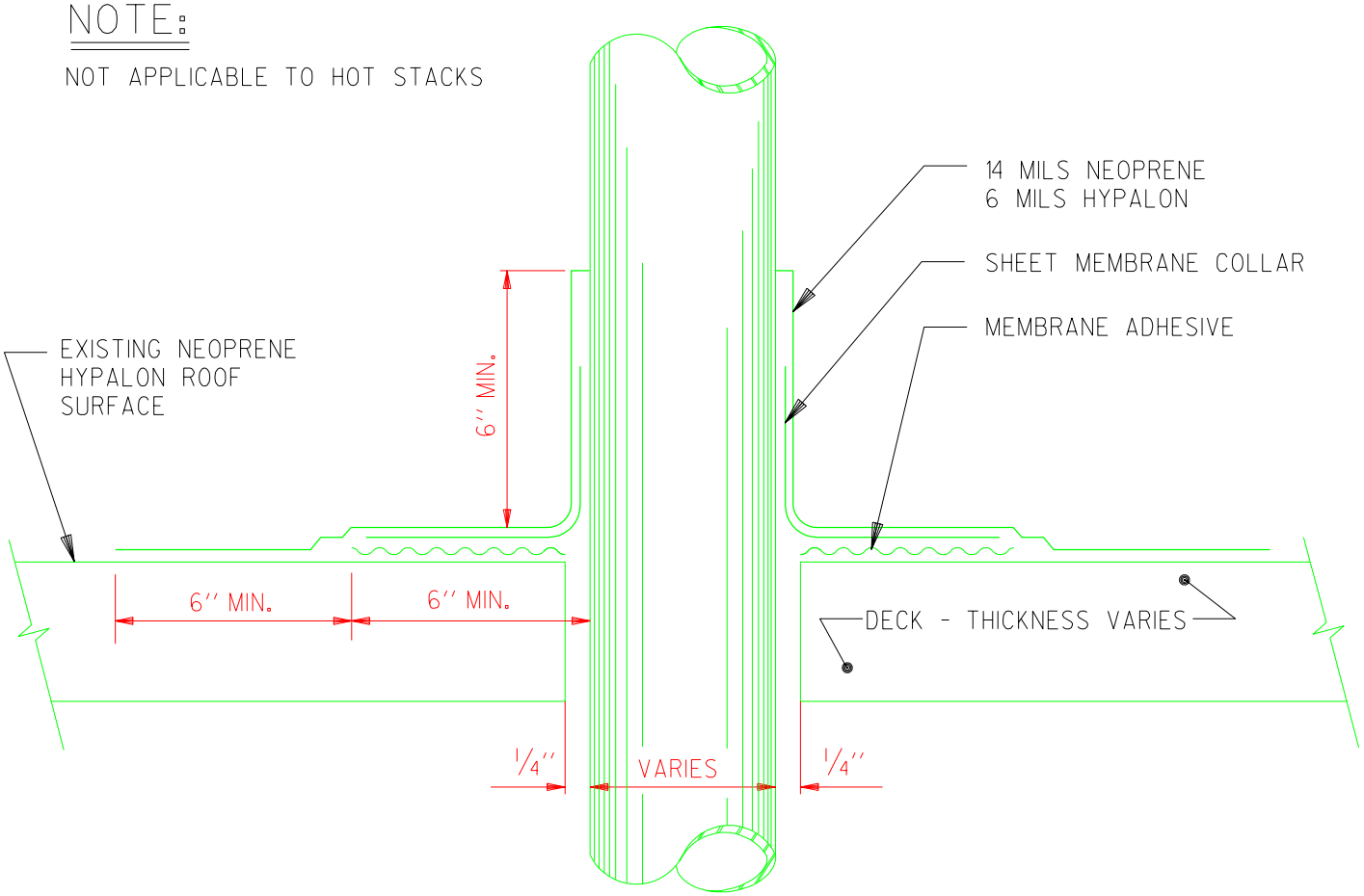

MATERIAL SPECIFICATIONS:

1. NEOPRENE SHALL BE A ONE-PART COMPOUND CONSISTING OF A CHLOROPRENE POLYMER MANUFACTURED FOR ROOFING PURPOSES.
2. HYPALON SHALL BE A ONE-PART SOLUTION OF A CHLOROSULFONATED POLYETHYLENE POLYMER MANUFACTURED FOR ROOFING PURPOSES.
3. SHEET MEMBRANE SHALL BE PRECURED CHLOROPRENE RUBBER 0.0312 INCH THICK.
4. SHEET MEMBRANE ADHESIVE SHALL BE A ONE-PART CHLOROPRENE COMPOUND, HAVING A MINIMUM ADHESION OF 20 POUNDS PER LINEAL INCH WHEN TESTED IN ACCORDANCE WITH ASTM PROCEDURE NO. D903-49. WHEN USED AS A CRACK FILLER, THE PRODUCT SHALL BE OF SUCH CONSISTENCY TO ACCOMPLISH THE PURPOSE.
5. DO NOT USE ANY COAL TAR OR ASPHALT.

REFER TO ROOFING MANUFACTURER'S SPECIFICATION FOR DETAILS OF APPLICATION.

"Property of Sandia National Laboratories Facilities Management and Operation Center (FMOC).
No duplication or alteration allowed without the expressed permission and authorization of FMOC."