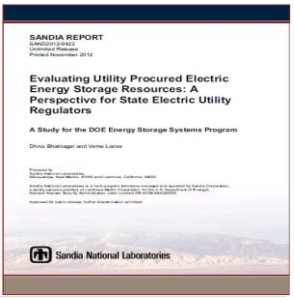

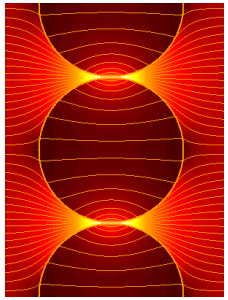

Testing and Validation: Grid-Level ESS Systems

David Rosewater

Presentation for

EMA Energy Storage Workshop

Singapore

August 2015

Sandia National Laboratories

Exceptional service in the national interest

U.S. DEPARTMENT OF ENERGY

NNSA National Nuclear Security Administration

SNL Document Number: 2015-6316C

Sandia National Laboratories is a multi-program laboratory managed and operated by Sandia Corporation, a wholly owned subsidiary of Lockheed Martin Corporation, for the U.S. Department of Energy's National Nuclear Security Administration under contract DE-AC04-94AL85000.

Intro to Safety in the Electric Grid

Codes, Standards, and Regulations (CSRs)

- National Electrical Code (NEC) was fist published in the 1897

Source: www.nfpa.org/

When something isn't in the code

- Equivalence
  - No more hazardous nor less safe
- Independent Arbitration
  - Offload liability onto a third party who will verify that systems are compliant with all applicable standards.
- Insurance
  - Actuarial tables track failures and correlate them to payouts
  - Technical decisions are approved by lawyers and economists

Safety Standards Acronyms Described & Used

- CAST

Causal **A**nalysis using **S**ystem **T**heory

- STPA

Systems-**T**heoretic **P**rocess **A**nalysis

- STAMP

System **T**heoretic **A**ccident **M**odel **P**rocess

Grid Energy Storage

- Storage can provide significant value to the grid
- Example technologies:

Batteries

Flywheels,

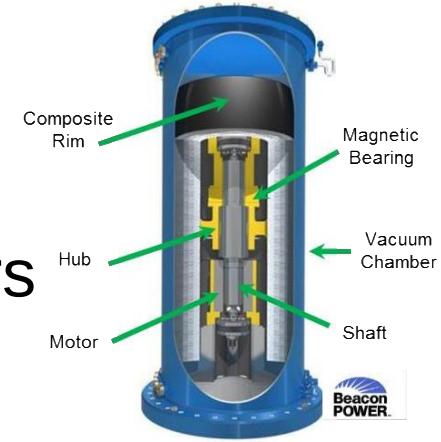

Ultra-capacitors

Flow Batteries

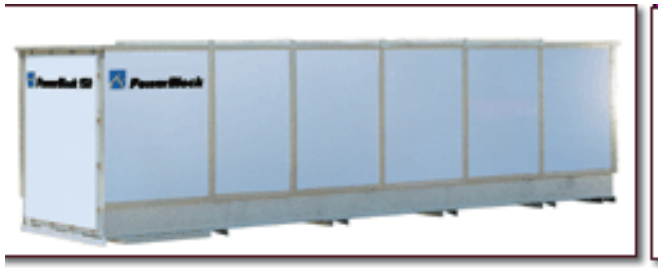

Picture Source: Energy Storage 101 Short Course Slides

Safety in Grid Energy Storage

A. Fast Pace of Technological Change

In many cases the technology is improving too quickly to properly adjust for the impact that changes have on safety. In the past decade the number of energy storage technologies has greatly expanded. These dynamics make safety difficult for standards bodies to properly control, as they are continuously acting on lagging information.

B. Increasing Complexity and Coupling

Even while the quantity of grid connected energy storage has been steadily increasing, its complexity has increased exponentially. This has made existing safety analyses tools much more difficult to apply and costs to companies to validate safety to increase.

C. Decreasing Tolerance for Single Accidents

Injuries generate lawsuits, fires raise insurance premiums, and reputation damage can result in significant lost business. The effects do not then stop with the company responsible. By association, the whole energy storage industry can be affected.

Source: Engineering a Safer World: Chapter 1: Why we need something different?

Example of CAST

Generic Flow Battery

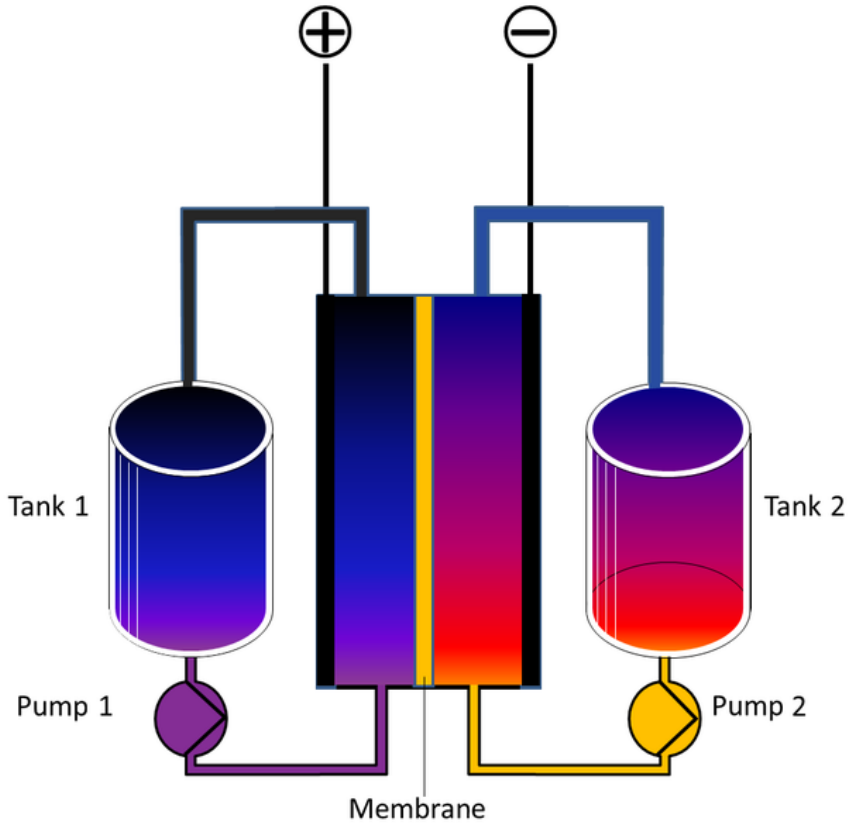

By Nick B, benboy00 [CC-BY-SA-3.0 (http://creativecommons.org/licenses/by-sa/3.0)], via Wikimedia Commons

Accident: Loss of effective electrolyte containment

- Several month delay for commissioning
- Leak sensors were removed to fill tank
- The vent had been blocked by nesting insects
- Electrolyte heated during use causing tank pressure to rise
- Tank was damaged by pressure rise and leaked
- Secondary containment filled and started to overflow

CAST of a Flow Battery Electrolyte Spill

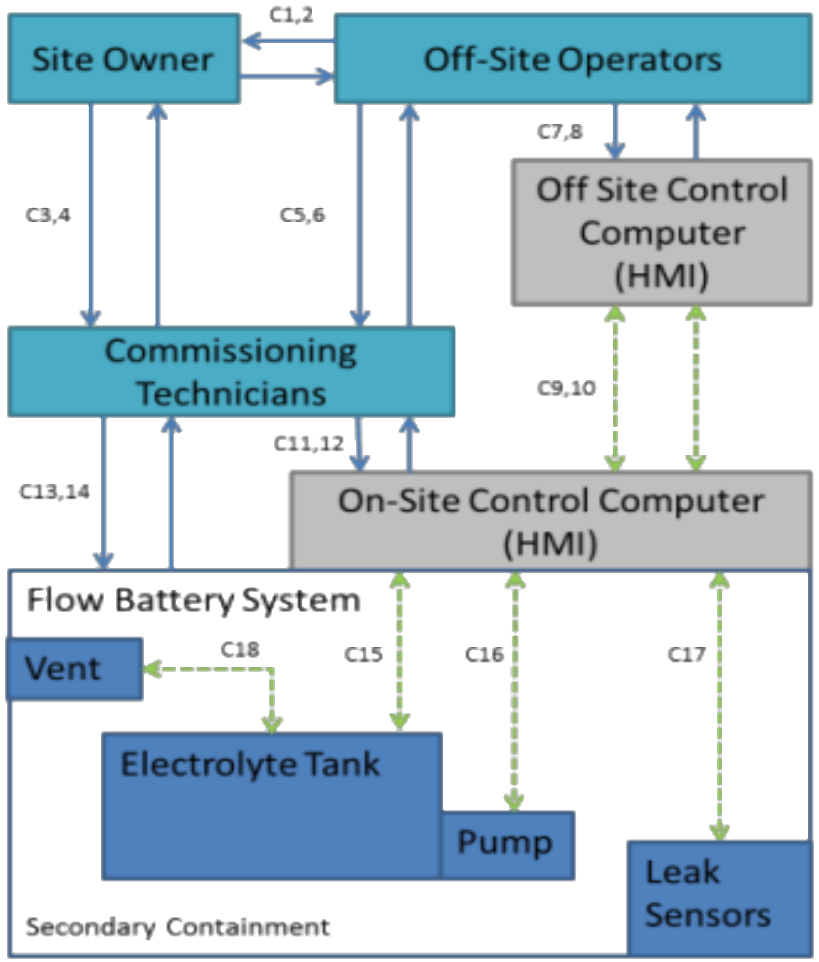

Flow battery functional control diagram

CAST of a Flow Battery Electrolyte Spill

- 3 Proposed corrective actions from initial incident report
- 9 Additional recommendations from applying CAST

Outcome of Root Cause Analysis

Proposed Actions
Develop Emergency Call List
Protection circuit verification to be performed before operation
Install Vent Tube Screen

Actions for Sandia/DOE

1. Develop consistent and complete Codes Standards and Regulations (CSR) for ESS
2. Develop general commissioning Requirements for ESS
3. Develop energy storage System Safety Protocols for flow batteries

Site Owner

4. Develop clear site use requirements

Actions for Off-Site Operators

5. Ensure communication with on-site personnel is consistent throughout commissioning

Energy Storage Vender

6. Update commissioning plan to include inspection and testing of all critical elements before operation
7. Design a feedback mechanism to detect tank overpressure
8. Conduct practice commissioning sessions for technicians
9. Design more effective secondary containment

Application of STPA

- Transpower GridSaver

Quick Stats.

- Prototype 1 MW Lithium-Ion Battery
- Built into a 40” shipping container
- Four 900 volt strings,
- Over 1000 individual battery cells,
- Liquid cooling loop for its power inverters.

(a) External

(b) Internal

Transpower GridSaver Battery Energy Storage System

The complexity of battery systems

- Control loops
  - Battery Parameters
    - Inverter
    - Air Conditioning
  - Inverter Parameters
    - Coolant
  - Grid Interaction
  - Maintenance
  - Incident Response
- 100's of safety control actions
- 1000's of causal factors

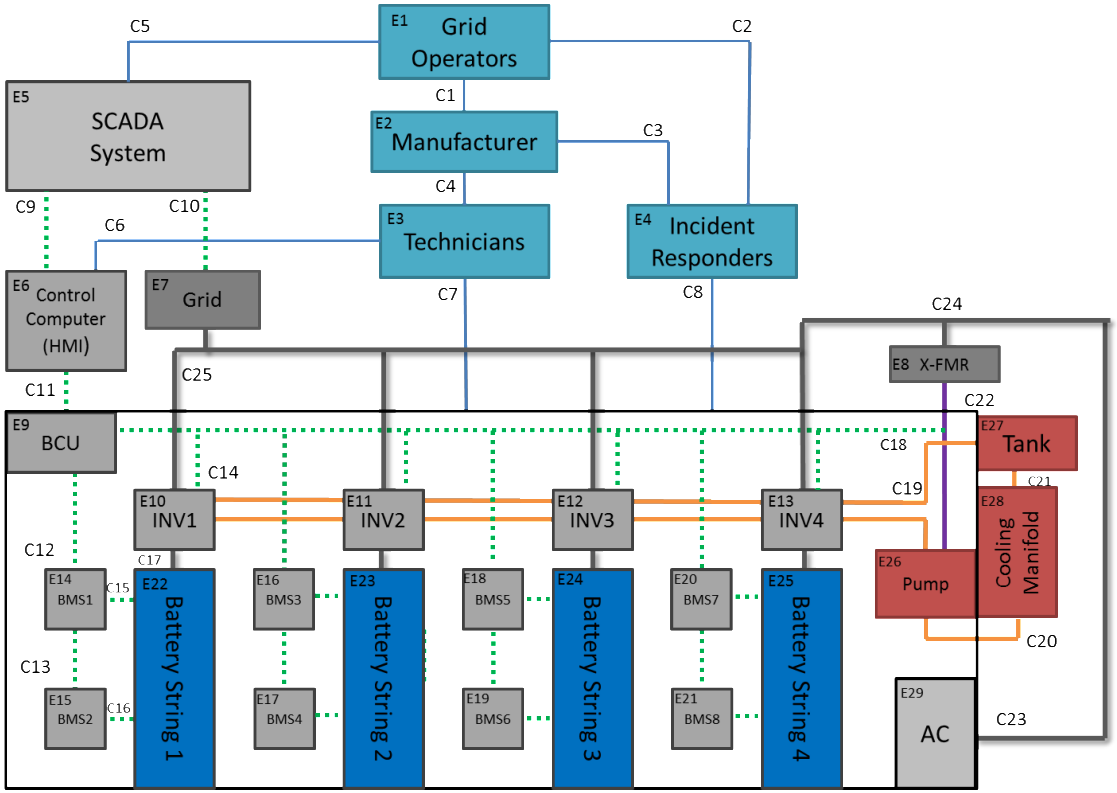

Safety Control Structure for the Transpower GridSaver

Selected Results to Date

- Unexpected causal factors
  - Not venting air form the enclosure
  - Profile used from a difference battery string
- Causal factors help develop tests for leading indicators

Test	Leading Indicator
Test for Measurement Accuracy	Measurement accuracy or delay is out of compliance
Operator Qualification Testing:	Operator does not meet the predefined minimum standard for qualification

Broader Impacts of STAMP

-Google Search for "Battery Safety"

How safe are lithium-ion ba
Smart phones and other devices ca
circumstances
Published: July 31, 2014 02:15 PM

Find Ratings
Batteries

You may have read a recen news story about a teenage whose Samsung Galaxy S smart phone slipped under pillow and began to smolde she slept. She woke to find her father told TV station K

melted. The plas was a phone."

The Galaxy S 4 phones and mob products. Samsu bedding or other battery was a rep actually caused

So, are lithium-i original manufac

Jeffrey P. Cham Energy Storage not properly rem reaction that cau

NREL
NATIONAL RENEWABLE ENERGY LABORATORY

Battery technology is at th most prevalent rechargeal phones, laptop computers ion rechargeable battery te your pocket or purse right

Although lithium-ion batter using ANY battery. Lithiun not used for their intended second-, and third-degree death. Please handle the

New Battery Sta
Batteries
Berkeley Lab and UNC-Chap
Feature Stories Julie Chao (51

Tweet 108 | g+1 21 | Like 180 | Share 0 | Email 7

Lawrence Berkeley National Laboratory (Berkeley Lab) battery scientist Nitash Balsa worked for many years trying to find a way to improve the safety of lithium-ion batteries. Now he believes he has found the answer in a most unlikely material—a class of compounds that has mainly been used for industrial lubrication.

Balsara and his co-inventor, Joseph DeSimone of the University of North Carolina at Chapel Hill, launched Blue Current, a startup company backed by investment firm Faster LLC, to further develop their invention, a nonflammable electrolyte.

"With current lithium batteries safety is engineered through the battery management system," Balsara said. "Although they are generally considered safe, you still have an

Volume 91 Issue 6 | pp. 33-37
Issue Date: February 11, 2013

Assessing The Safety Of Lithium-Ion Batteries
Airplane fires refocus attention on rare but serious battery hazards and ways to avoid them

By **Mitch Jacoby**

Department: **Science & Technology**
Keywords: **lithium-ion battery**, **787**, **battery fire**, **battery safey**, **electrode**

[+]Enlarge

Lithium-ion batteries are back in the c aboard **Boeing** 787 Dreamliner airplan drew readers to stories about flaming a of these popular power packs' tendency Broadcasts pointed out that fires in port ago prompted manufacturers to recall n

But these batteries are statistically very the area of lithium-ion battery safety," s specialist at Lexington, Mass.-based te rates for rechargeable Li-ion batteries a

Sources:

http://www.consumerreports.org/cro/news/2014/07/how-safe-are-lithium-ion-batteries/index.htm

http://newscenter.lbl.gov/2015/02/09/new-battery-startup-promises-safe-lithium-batteries/

http://www.nrel.gov/education/pdfs/lithium-ion_battery_safety_hazards.pdf

http://cen.acs.org/articles/91/i6/Assessing-Safety-Lithium-Ion-Batteries.html

Broader Impacts of STAMP

"Battery Safety" is a buzz word around which many conferences, research programs, and products are organized.

Battery Cell Properties

Kristoferb [CC-BY-SA-3.0 (http://creativecommons.org/licenses/by-sa/3.0) or GFDL (http://www.gnu.org/copyleft/fdl.html)], via Wikimedia Commons

- ✓ Capacity
- ✓ Volatility
- ✓ Temperature Range
- ✗ Safety

"Safety" is not a property of a component

Battery System Properties

By Jelson25 (Own work) [CC-BY-3.0 (http://creativecommons.org/licenses/by/3.0)], via Wikimedia Commons

- ✓ Capacity
- ✓ Service Life
- ✓ Control Algorithm
- ✓ **Safety**

Safety is a system property

A systems perspective on safety offers better language to communicate how batteries can be kept safe and why they sometimes are not kept safe (rather then are or are not safe)

U.S. DEPARTMENT OF ENERGY | Sandia National Laboratories

Energy Storage Testing and Validation

Independent testing of individual cell level to megawatt-scale electrical energy storage systems

U.S. DEPARTMENT OF ENERGY | Electricity Delivery & Energy Reliability

Energy Storage Program

Sandia National Laboratories

Testing and validating the performance of electrical equipment is a critical step in the process to deploy technologies in the grid. Before these devices, such as batteries and flywheels, are installed in the grid, they must be proven to be safe and reliable. However, energy storage manufacturers and integrators are often unable to afford or have the capabilities to provide long-term testing and monitoring.

Overview

At Sandia National Laboratories, the Energy Storage Analysis Laboratory, in conjunction with the Energy Storage Test Pad, provides independent testing and validation of electrical energy storage systems at the individual cell level up to megawatt-scale systems.

In addition to various types of long-term testing, Sandia provides pre-certification and pre-installation verification and configuration of energy storage systems.

Benefits

- Manufacturers often do not have facilities to fully evaluate cells, modules, or systems under the desired conditions due to limitations in testing equipment or prohibitive cost, but they can turn to Sandia's testing capabilities to assist with testing.
- Implementing third party independent testing and verification provides potential customers with confidence that the energy storage technology will perform as promised.

Technology Capabilities

Energy Storage Analysis Laboratory–Cell, Battery and Module Testing

- 14 channels from 36 V, 25 A to 72 V, 1,000 A for battery to module-scale tests
- More than 125 channels; 0 V to 10 V, 3 A to 100+ A for cell tests
- Temperature chambers for thermal control
- 34 channels from 5 V–60 V and 15 A–500 A
- Potentiostat/Galvanostat for spectral impedance tests
- Infrared camera

A testing device from the Energy Storage Analysis Laboratory.

Energy Storage Test Pad – System Testing

- Scalable from 5 kW to 1 MW,
- 480 VAC, three phase
- 1 MW/1 MVAR load bank for either parallel microgrid or series uninterruptible power supply operations
- Subcycle metering in feeder breakers for system identification and transient analysis

The Energy Storage Test Pad.

Working with the Energy Storage Analysis Laboratory and the Energy Storage Test Pad

Both the Energy Storage Analysis Laboratory and the Test Pad are available to serve the needs of a wide variety of electrical energy storage stakeholders:

- EES system manufacturers
- Utilities
- Independent system operators
- Independent power producers
- Regional transmission operators
- Renewable project developers
- Commercial, industrial, and government agencies
- Independent laboratories, government laboratories, and universities

Various options are available for funding testing activities and protecting intellectual property. Some examples include the following:

- The Cooperative Research and Development Agreement (CRADA) funding process is used when work is performed by Sandia and industrial or other non-federal partners that benefit the goals of each participant. CRADAs may be cost-shared or 100% funded by the industrial partner.
- Work for Others (WFO) is work performed for non-U.S. Department of Energy (DOE)/National Nuclear Security Administration (NNSA) sponsors that is not directly funded by DOE/NNSA. WFO agreements can be utilized in order for an entity to enlist Sandia to provide it with private results.
- Non-disclosure agreements are legally binding agreements promising that the party receiving information will not disclose that information to any other party. The receiving party undertakes certain obligation regarding the information. Foremost, the obligation is a restriction on disclosing the information for a certain time period.

Specialized Testing Services

- Verifying storage device's reliability
- Analyzing performance relative to standards
- Developing new testing procedures
- Testing devices with different applications (e.g., energy time shift and load following)
- Evaluating system parameters

Current Industrial Users

- Altair Nano
  www.altairnano.com
- International Battery
  www.internationalbattery.com
- RedFlow
  www.redflow.com
- Deka/East Penn
  www.dekabatteries.com

For More Information

David Rose
Energy Storage Test Pad
Sandia National Laboratories
dmrose@sandia.gov

Summer Ferreira
Energy Storage Analysis Laboratory
Sandia National Laboratories
srferre@sandia.gov

Related Reading

Sandia National Laboratories, "Energy Storage Systems Program (ESS)," http://www.sandia.gov/ess/.

Summer Ferreira, "Life Cycle Testing and Evaluation of Energy Storage Devices," presentation at the 2012 DOE Energy Storage Program Peer Review, http://www.sandia.gov/ess/docs/pr_conferences/2012/papers/Friday/Session1/03_Ferreira_PeerReview_Print.pdf.

David Rose, "Life Energy Storage Test Pad," presentation at the 2012 DOE Energy Storage Program Peer Review, http://www.sandia.gov/ess/docs/pr_conferences/2012/papers/Friday/Session1/04_Rose_PeerReview.pdf.

Importance of Energy Storage

Large-scale, low-cost energy storage is needed to improve the reliability, resiliency, and efficiency of next-generation power grids. Energy storage can reduce power fluctuations, enhance system flexibility, and enable the storage and dispatch of electricity generated by variable renewable energy sources such as wind, solar, and water power. The Office of Electricity Delivery and Energy Reliability Energy Storage Program funds applied research, device development, bench and field testing, and analysis to help improve the performance and reduce the cost of energy storage technologies.

Performance and Reliability Analysis of Energy Storage Devices

Summer Ferreira, Wes Baca, Tieshia Francis

SNL Energy Storage System Analysis Laboratory

Problem:
- Life of storage technologies uncertain yet critical to validating economics
- Potential storage customers, i.e. utilities, without experience in storage, are reluctant consumers.

Approach:
- Make advances through test protocol, using direct research, standards activities and analysis projects with commercial manufacturers
- High precision testing spun off as an ARPA-E grant recipient in 2013

Consulting available as well as:
- OE supported testing
- CRADA opportunities
- WFO arrangements

72 V 1000 A Bitrode (2 Channels)

Combining experimental development and use of protocols in the lab, and a long history of collaborative research into commercial technologies we deepen understanding of laboratory results and their correlation to field performance to inform community, and standards development.

Energy Storage Systems Analysis Lab Integrated Analysis

Cell Analysis- Lab analysis of performance and reliability

Battery Analysis

Pack Analysis

System Analysis- Energy storage test pad performance and remote validation

Demonstration projects – collaborative development and monitoring

Thank You to the DOE OE and especially Dr. Gyuk for his dedication and support to the ES industry and Sandia's ES Program.

I also want to acknowledge professor Nancy Leveson and her team at MIT for the development of STAMP, STPA, and CAST. More information can be found at:

http://sunnyday.mit.edu/

Questions?

David Rosewater

dmrose@sandia.gov

505 844-3722