Robustness of Optimally Controlled Unitary Quantum Gates

Constantin Brif (*Sandia/CA*)

in collaboration with Matthew Grace (*Sandia/CA*), Katharine Moore and Herschel Rabitz (*Princeton*)

Silicon S&T Quantum Computing 4th Annual Workshop
Albuquerque, August 23-24, 2010

Sandia National Laboratories is a multi-program laboratory managed and operated by Sandia Corporation, a wholly owned subsidiary of Lockheed Martin Corporation, for the U.S. Department of Energy's National Nuclear Security Administration under contract DE-AC04-94AL85000. SAND2010-5853C

Basic definitions: Unitary quantum gates

A unitary quantum gate is the basic functioning element of a quantum computer. Some basic notation:

n	number of qubits in the quantum gate system
$N = 2^n$	dimension of the system's Hilbert space
$W \in \mathrm{U}(N)$	the target unitary transformation
$U(T) \in \mathrm{U}(N)$	the actual evolution operator of the system at the final time T

The same unitary transformation is applied to any input state:

$$|\psi_{\mathrm{in}}\rangle \longrightarrow \boxed{U(T)} \longrightarrow |\psi_{\mathrm{out}}\rangle = U(T)|\psi_{\mathrm{in}}\rangle$$

Universal and multi-qubit gates

Universality: Any n-qubit gate can be realized by a sequence of elementary one- and two-qubit gates.

A **general** n-qubit transformation requires at least 4^n two-qubit gates (exponential in the number of qubits).

In important **special** cases, **quantum speed-up** is possible, e.g., the quantum Fourier transform (used in Shor's algorithm) requires only a polynomial in n number of two-qubit gates.

Multi-qubit gates: The gate operates simultaneously on all n qubits.

Drawbacks: More difficult to engineer and control.

Advantages: Many papers suggest that operating on many qubits at once may reduce the overall computation time and thus reduce the effect of the interaction with the environment.

Designing controls for multi-qubit gates is not easy, but possible.
Are there any other problems with controlling multi-qubit gates?

Controlled quantum gate

An external classical control $c(t)$ is necessary to operate the quantum gate. The Hamiltonian and evolution operator are functionals of the control:

$$H = H_0 + H_{\mathrm{c}}[c(t)], \quad U = U[c(t)], \quad t \in [0, T]$$

Gate fidelity is a measure of how well the target transformation was performed:

$$F = 1 - \|W - U(T)\|$$

It is convenient to use a normalized fidelity:

$$F = \frac{1}{N}\mathrm{ReTr}\left(W^\dagger U\right) \quad \text{or} \quad F = \frac{1}{N}\left|\mathrm{Tr}\left(W^\dagger U\right)\right|$$

Gate fidelity is also a functional of the control:

$$F = F[c(t)]$$

Sandia National Laboratories

Quantum control landscape and optimality

The functional dependence $F = F[c(t)]$ is called the **control landscape**.

The **critical points** of the control landscape satisfy:

$$\frac{\delta F}{\delta c(t)} = 0,$$

$$\forall t \in [0, T]$$

A sufficient condition for **optimality** of a critical point is negative semidefiniteness of the Hessian matrix:

$$\mathcal{H}(t, t') = \frac{\delta^2 F}{\delta c(t') \delta c(t)}$$

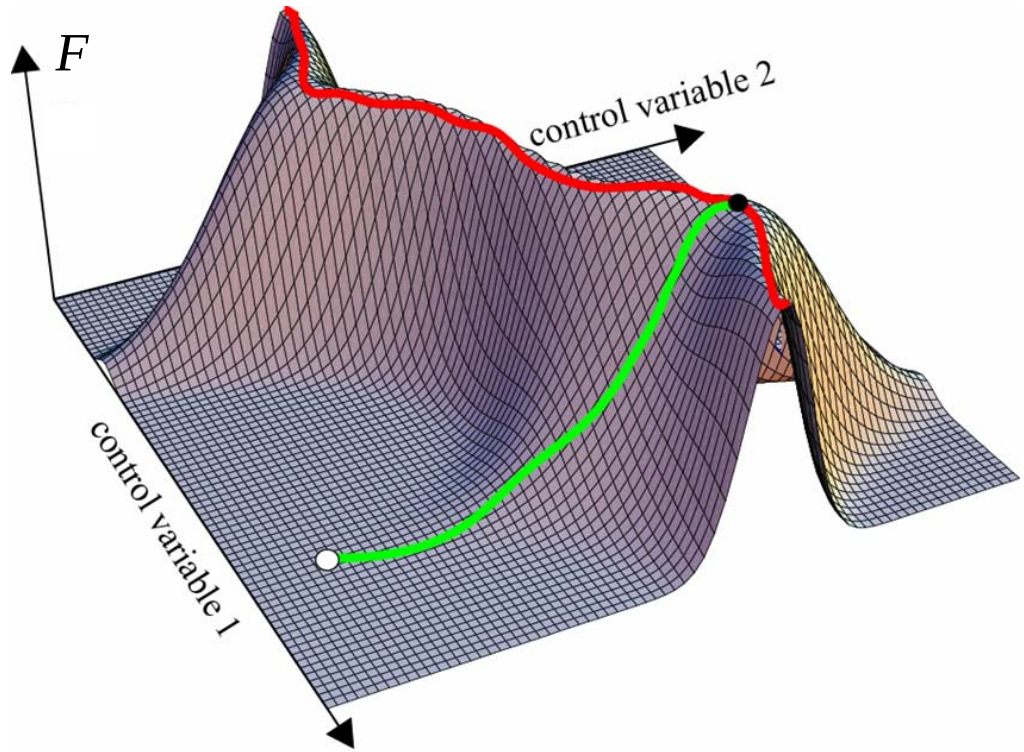

For a recent review, see
C. Brif, R. Chakrabarti, and H. Rabitz,
New J. Phys. **12**, 075008 (2010)

Sandia National Laboratories

Optimally controlled quantum gate

The control landscape analysis reveals that:

- There is one **maximum** manifold: $F = 1$
- There is one **minimum** manifold: $F = 0$
- All other critical manifolds are **saddles** (can be avoided by a smart optimization algorithm)

An **optimal control solution** $c_0(t)$ is perfect in ideal conditions (no environment, no noise, no uncertainties):

$$U[c_0] = W \Rightarrow F[c_0] = 1$$

The Hessian at any optimal control solution has only non-positive eigenvalues. The "flatness" of the control landscape in the vicinity of an optimal control solution depends on the number of zero Hessian eigenvalues and magnitude of negative Hessian eigenvalues.

For evolution-operator control: $\mathrm{Tr}\mathcal{H}$ has the same value for all optimal control solutions.

Sandia National Laboratories

Optimal quantum gate with noisy control

All real controls are noisy! Consider a unitary quantum gate operating in the vicinity of an optimal control:

$$c(t) = c_0(t) + \delta c(t)$$

In the case of small random noise, the control error is a random variable:

$$\delta c(t) = \xi$$

which takes values from a distribution P.

A distribution P of control errors will result in a distribution Q of fidelity values:

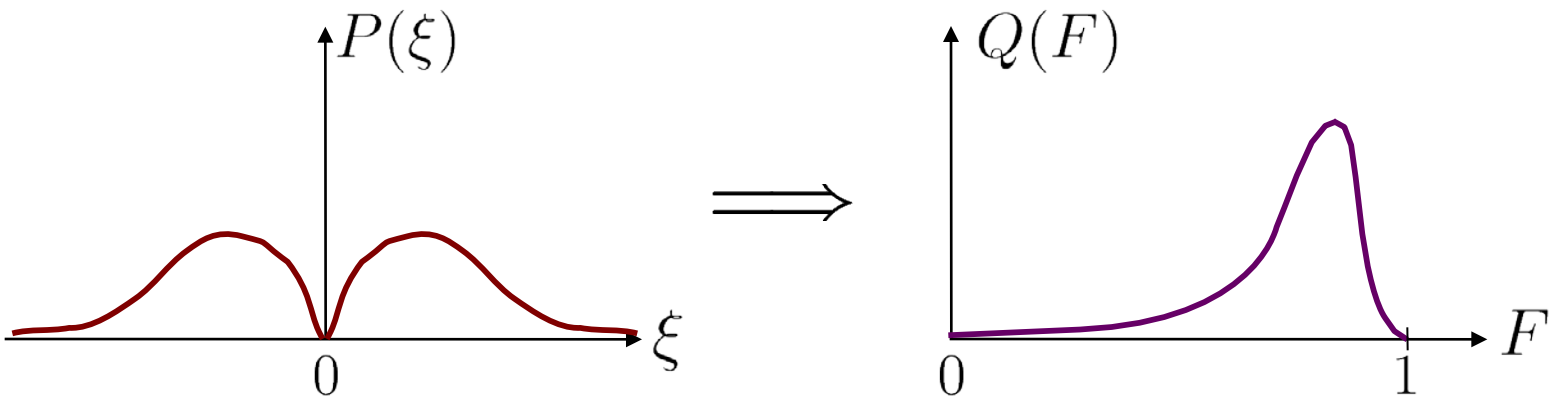

Sandia National Laboratories

Adaptive optimization of quantum gate fidelity

We seek **improved robustness to control noise** – i.e., want to minimize the decrease in fidelity for a given level of errors in the controls.

A laboratory-oriented approach – closed-loop optimization using **adaptive feedback control** (AFC) in the laboratory (or numerical simulation)

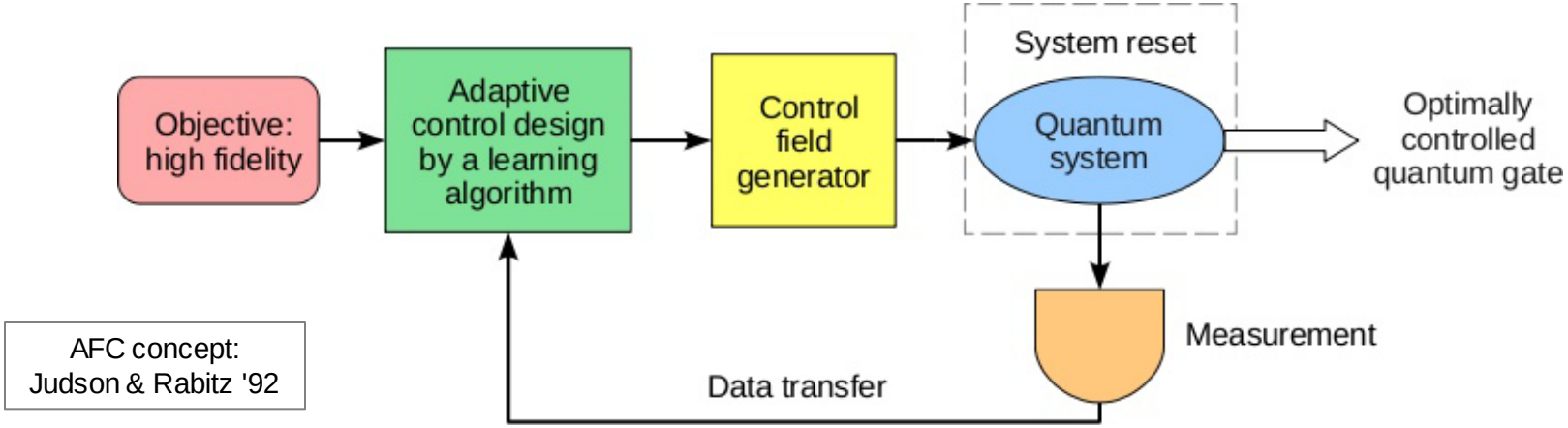

AFC concept: Judson & Rabitz '92

Advantages of laboratory AFC:

- Optimization is for actual system with actual noise, not a simplified model;
- Each trial is very fast (~ps for system evolution, ~ms for control generation).

Drawback of laboratory AFC: Fidelity estimation requires process tomography (very expensive in number of experiments for multi-qubit systems)

Sandia National Laboratories

Adaptive optimization of quantum gate fidelity

In laboratory, typically, **averaged signal** is used. Therefore, the signal that will be actually optimized is the **average fidelity**:

$$\overline{F} = \int P(\xi) F(\xi) d\xi = \int Q(F) F dF$$

<u>Possibilities for improving robustness</u>:

- **Multi-objective optimization:** Explore the Pareto front for two competing objectives:

  (1) maximize $\overline{F}$ and (2) minimize σ_F

  Simulated (for a different objective) by J.M. Geremia, W.S. Zhu, and H. Rabitz '00

- Optimization for another objective, e.g., **"error threshold" objective**:

  Suggested by S.G. Schirmer

  maximize $\displaystyle\int_{1-\epsilon_{\rm th}}^{1} Q(F) dF$

  where $\epsilon_{\rm th}$ is the error threshold for fault-tolerant quantum computation

Sandia National Laboratories

Improving robustness via landscape analysis

In addition to the "brute-force" approach of closed-loop AFC optimization, it is also possible to explore robustness by **analyzing the quantum control landscape** in the vicinity of optimal solutions. The robustness is determined by the "flatness" of the landscape at the optimum, i.e., by the Hessian matrix.

Expanding near a maximum $F[c_0] = 1$, and assuming small noise, one obtains:

$$F[c] \approx 1 - \frac{1}{2} \int_0^T \int_0^T |\mathcal{H}(t,t')| \, \delta c(t) \delta c(t') dt dt'$$

It would be interesting to explore the robustness in the spectral domain for various noise spectra. For white noise, the decrease in F is proportional to $\mathrm{Tr}\mathcal{H}$ which is the same for all optimal solutions and scales as $N = 2^n$.

For a structured noise, it would be possible to search through the manifold of optimal solutions to identify those with higher level of robustness (due to favorable Hessian characteristics).

Sandia National Laboratories

A perturbative analysis of robustness to noise near an optimal control

Gate fidelity: $$F = \frac{1}{N}\left|\mathrm{Tr}\left(W^\dagger U\right)\right|$$

Action operators: $$U = \exp(iA), \quad W = \exp(iB)$$

At an optimal control: $$A[c_0] = B, \quad U[c_0] = W, \quad F[c_0] = 1$$

Consider a quantum gate that operates near an optimal control:

$$c(t) = c_0(t) + \delta c(t)$$

$$A[c_0 + \delta c] = B + \Delta[c_0, \delta c]$$

$$F = \frac{1}{N}\left|\mathrm{Tr}\left(e^{-iB}e^{iB+i\Delta}\right)\right|$$

Sandia National Laboratories

A perturbative analysis of robustness to noise near an optimal control

Basic assumptions about noise and system characteristics:

1. Control errors are small: $\|\delta c(t)\| \ll \|c_0(t)\|$

2. Control errors are random: the error matrix elements Δ_{pq} are symmetrically distributed around zero ($\overline{\Delta} = 0$).

3. The system does not amplify noise (small control errors result in small action errors):

$$\|\delta c(t)\| \ll \|c_0(t)\| \Rightarrow |\Delta_{pq}| \ll 1 \quad \forall p, q$$

Sandia National Laboratories

Decrease in gate fidelity due to control noise

Using the assumptions above, we obtain:

$$F[c_0 + \delta c] = \frac{1}{N} \left| \mathrm{Tr}\left(e^{-iB} e^{iB+i\Delta}\right) \right| \approx 1 - \zeta(B, \Delta)$$

$$\zeta(B, \Delta) = \frac{1}{N} \int_0^1 ds \int_0^s dx \mathrm{Tr}\left(e^{-ixB} \Delta e^{ixB} \Delta\right)$$

It is convenient to use the basis of eigenstates of *B*:

$$B|\varphi_p\rangle = b_p|\varphi_p\rangle, \quad B_{pq} = b_p \delta_{pq}$$

With some algebra, we find:

$$F[c_0 + \delta c] \approx 1 - \frac{1}{N} \sum_{p,q=1}^{N} g(b_p - b_q) \left|\Delta_{pq}\right|^2$$

$$2/\pi^2 \leq g \leq 1/2$$

Sandia National Laboratories

Scaling of fidelity decrease with number of qubits

Additional assumptions for a general n-qubit gate:

4. The distribution of the error matrix elements Δ_{pq} has standard deviation σ_Δ
5. The amount of energy required to control each transition

$$|\varphi_p\rangle \leftrightarrow |\varphi_q\rangle$$

and the corresponding magnitude of the noise introduced by the control are independent of the total size of the system. This means that the distribution of $|\Delta_{pq}|$ is independent of N.

Using these assumptions, we obtain:

$$\sum_{p,q=1}^{N} g(b_p - b_q)\,|\Delta_{pq}|^2 \approx \overline{g}\sigma_\Delta^2 N^2$$

$$\boxed{F[c_0 + \delta c] \approx 1 - \overline{g}\sigma_\Delta^2 2^n}$$

Sandia National Laboratories

Numerical simulation:
Scaling with the control error magnitude

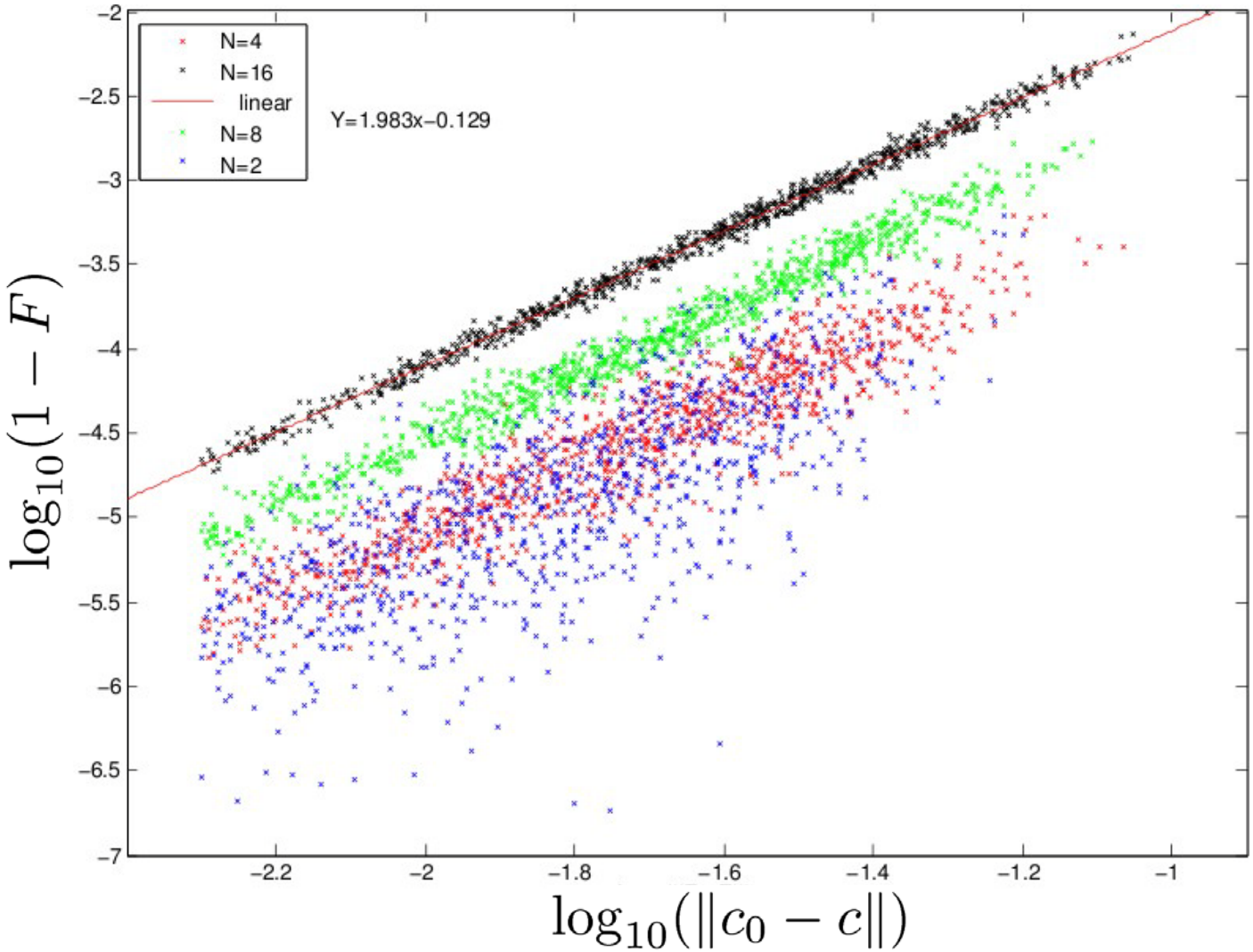

Sandia National Laboratories

Numerical simulation:
Scaling with the number of qubits

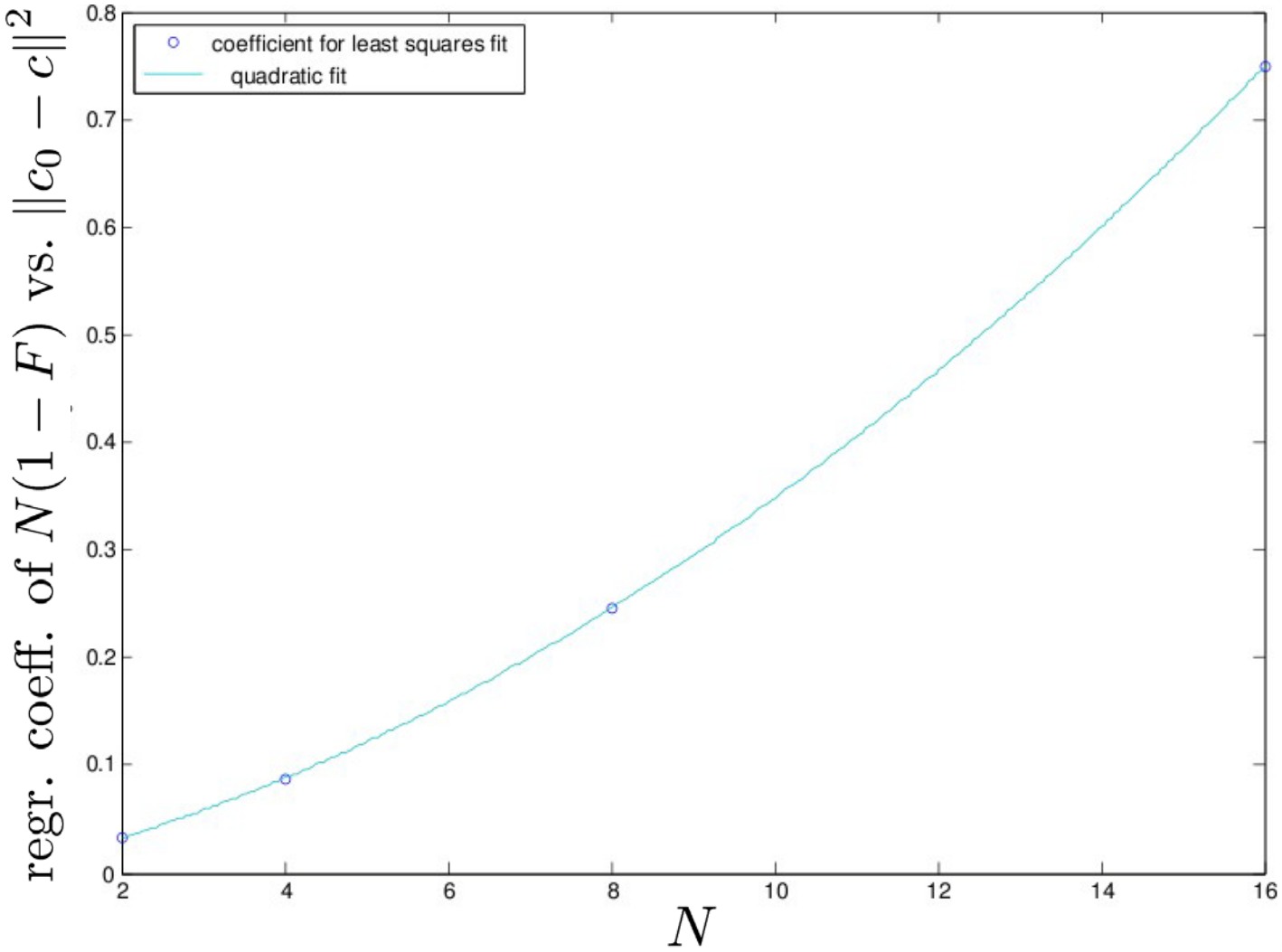

Sandia National Laboratories

Fidelity of universal gates

Multi-qubit gates are **not** robust to control errors! $1 - F \propto 2^n$

Universal gates: are they more robust?

A universal gate performs a non-trivial transformation on just a small fixed number of qubits (m out of n, where $m = 1$ or 2):

$$W_{\{m\}} = \otimes_{j=1}^{n-m} I_{2\times 2}^{(j)} \otimes w_{\{m\}}, \quad W_{\{m\}} \in \mathrm{U}(2^n), \; w_{\{m\}} \in \mathrm{U}(2^m)$$

Universality means that an arbitrary transformation $W \in \mathrm{U}(2^n)$ can be realized as a product of a (large) number of transformations $W_{\{m\}}$.

<u>Analysis:</u> Consider a system composed of two parts, 1 and 2:

$$W_1 = e^{iB_1}, \quad W_2 = e^{iB_2}, \quad W = W_1 \otimes W_2$$

$$W = e^{iB}, \quad B = B_1 \otimes I_2 + I_1 \otimes B_2$$

$$\Delta = \Delta_1 \otimes I_2 + I_1 \otimes \Delta_2 + \Delta_{\mathrm{int}}$$

Sandia National Laboratories

Gate fidelity for uncoupled systems

First, consider completely uncoupled subsystems: $\Delta_{\rm int} = 0$

$$F[c_0 + \delta c] = F_1 F_2, \quad F_j = 2^{-n_j} \left| \mathrm{Tr}\left(e^{-iB_j} e^{iB_j + i\Delta_j}\right) \right|, \quad j = 1, 2$$

With the assumptions of small random errors:

$$F[c_0 + \delta c] \approx (1 - \varepsilon_1)(1 - \varepsilon_2) \approx 1 - (\varepsilon_1 + \varepsilon_2)$$

$$\varepsilon_j = \overline{g}(W_j)\sigma^2_{\Delta_j} 2^{n_j}, \quad j = 1, 2$$

We see that, for small random errors, the gate fidelity decrease of the complete system is just the **sum** of the fidelity decreases of its completely uncoupled subsystems. For the universal gate $W_{\{m\}}$:

$$F[c_0 + \delta c] \approx 1 - \left[\overline{g}(w_{\{m\}})\sigma^2_{\Delta_w} 2^m + \sum_{j=1}^{n-m} \sigma^2_{\Delta_j} \right]$$

For universal gates with m=1 or m=2, the decrease of the gate fidelity is practically **linear** in the total number of qubits, n. This result holds only if all subgates of the universal gate are **completely uncoupled**!

Sandia National Laboratories

Gate fidelity for coupled systems

Next, consider coupled subsystems: $\Delta_{\rm int} \neq 0$

With the assumptions of small random errors:

$$F[c_0 + \delta c] \approx 1 - (\delta F_1 + \delta F_2 + \delta F_{\rm int})$$

$$\delta F_1 \approx \overline{g}(W_1)\sigma^2_{\Delta_1} 2^{n_1}, \quad \delta F_2 \approx \overline{g}(W_2)\sigma^2_{\Delta_2} 2^{n_2}$$

$$\delta F_{\rm int} \approx \frac{1}{N} \sum_{p,q=1}^{N} g_W(b_p - b_q) \left|(\Delta_{\rm int})_{pq}\right|^2, \quad N = 2^{n_1+n_2}$$

The scaling of the interaction term depends on the actual structure of the matrix of action errors caused by coupling.

If coupling is used to produce a general *n*-qubit gate, then we return back to the case we already considered.

If the interaction term is caused by small unwanted couplings between the qubits, the structure of the error matrix is unclear.

Sandia National Laboratories

Summary of results

Robustness of a general n-qubit gate: $1 - F \propto 2^n$

Robustness of a universal gate with complete isolation of one- and two-qubit subgates: $1 - F \propto n$

Robustness of a universal gate with small unwanted couplings between the qubits: **Unclear**

Ways to improve robustness:

■Closed-loop AFC optimization (in laboratory or numerical simulation)
●Multi-objective optimization (explore the Pareto front for maximizing the average fidelity and minimizing the standard deviation)
●Optimize the "error threshold" objective
●Some other objective(s)?

■Explore the Hessian in the vicinity of optimal solutions (for a given noise spectrum) and identify the optima with higher level of robustness

Sandia National Laboratories

Open questions

It is unclear what is the actual structure of the matrix of the action errors in the case when the interaction between the qubits results from **small unwanted coupling**. This question is crucial for understanding the robustness of realistic quantum computing systems to control errors.

Another open question is whether a scheme of **fault-tolerant** (FT) quantum computation can have an effect on the structure of the action error matrix. Most FT schemes assume uncorrelated errors. Can FT deal with **correlated errors** (i.e. unwanted coupling) and change the structure of Δ_{int} in a favorable way?

Provided that subgates are almost completely isolated, robustness of **quantum error correction** (QEC) should not be a problem, since QEC employs universal gates. However, the above questions need to be answered in order to assess the feasibility of QEC in the presence of small (but not negligible) unwanted coupling between the qubits (including ancillas).